SIAM J. APPL. MATH.
Vol. 66, No. 4, pp. 1321–1338

MULTIPLE EQUILIBRIA IN COMPLEX CHEMICAL REACTION NETWORKS: II. THE SPECIES-REACTION GRAPH*

GHEORGHE CRACIUN† AND MARTIN FEINBERG‡

Abstract. For mass action kinetics, the capacity for multiple equilibria in an isothermal homogeneous continuous flow stirred tank reactor is determined by the structure of the underlying network of chemical reactions. We suggest a new graph-theoretical method for discriminating between complex reaction networks that can admit multiple equilibria and those that cannot. In particular, we associate with each network a species-reaction graph, which is similar to reaction network representations drawn by biochemists, and we show that, if the graph satisfies certain weak conditions, the differential equations corresponding to the network cannot admit multiple equilibria *no matter what values the rate constants take*. Because these conditions are very mild, they amount to powerful (and quite delicate) necessary conditions that a network must satisfy if it is to have the capacity to engender multiple equilibria. Broad qualitative results of this kind are especially apt, for individual reaction rate constants are rarely known fully for complex reaction networks (if they are known at all). Some concluding remarks address connections to biology.

Key words. equilibrium points, chemical reaction networks, mass action kinetics, SR graph

AMS subject classifications. 92C45, 65H10, 80A30, 37C25

DOI. 10.1137/050634177

1. Introduction.

The purpose of this article is to provide theory for distinguishing between complex chemical reaction networks that have the capacity to admit multiple positive equilibria and those that do not. In particular, we shall be interested in networks governed by mass action kinetics and operating in the context of what chemical engineers call the continuous flow stirred tank reactor (CFSTR [1]). Models in cell biology sometimes invoke pictures and mathematics reminiscent of CFSTRs [9, 12, 17, 14], so it not unreasonable to expect that theory presented here might ultimately provide insight that is useful in biological applications. Indeed, in biology one rarely has detailed knowledge of reaction rate constants; at the outset, then, it is especially appropriate to seek a *qualitative* understanding of the relationship between reaction network structure and the capacity for various kinds of behavior (e.g., bistability). As we indicated in the first article of this series [4], the connection between the two is quite delicate. The theory offered here is intended to render the relationship between reaction network structure and behavior more concrete.

Our principal results will serve to describe very large classes of networks, including highly complex ones, that cannot give rise to multiple steady states regardless of parameter values. These results provide very strong necessary conditions that a network must satisfy if it is to have the capacity to give rise, for example, to bistable behavior.

*Received by the editors June 21, 2005; accepted for publication (in revised form) December 19, 2005; published electronically March 31, 2006.
http://www.siam.org/journals/siap/66-4/63417.html

†Mathematical Biosciences Institute, The Ohio State University, Columbus, OH 43210, and Department of Mathematics and Department of Biomolecular Chemistry, University of Wisconsin, Madison, WI 53706 (craciun@math.wisc.edu). This author was supported by the National Science Foundation under agreement 0112050.

‡Department of Chemical Engineering and Department of Mathematics, The Ohio State University, Columbus, OH 43210 (feinberg.14@osu.edu). This author was supported by the National Science Foundation through grants BES 0222367 and BES-0425459.

Denial of the capacity of a reaction network to admit multiple equilibria follows from inspection of what we call the Species-Reaction Graph (or SR graph [3]) for the network, which is similar to the reaction diagram often drawn by biochemists. Properties of the SR graph and results about it are similar to those in earlier work [8, 15, 16] on properties of a related graph, called the Species-Complex-Linkage Graph (or SCL graph). However, the newer results presented here are substantially more generous in the information they give. Inspection of the SR graph often tells one very quickly that the network under study is, in the sense of a previous article [4], *injective*, which in turn implies that multiple positive equilibria are impossible. That is, inspection of the SR graph for a reaction network will often tell one that the complex nonlinear system of differential equations associated with the network cannot admit multiple positive equilibria, no matter what values the (generally unknown) parameter values might take.

Our aim in this introductory section is to present, in an informal way, the main theorem of this article, largely motivated by a single example. More formal definitions are given in section 2, which will prepare the groundwork for proofs.

A CFSTR consists of a perfectly stirred vessel along with two streams, a feed stream that carries reactants to the vessel and an outflow stream that leaves the vessel, carrying away mixture having the same instantaneous composition as that within the vessel. Hereafter we suppose that the mixtures involved are liquids, all of which have the same time-invariant density, that the mixture within the vessel is maintained at a fixed temperature, and that the feed and outflow streams have the same volumetric flow rate, g (volume/time). For the purposes of an example, we will suppose that (1.1) is a network of chemical reactions among species A, B, M, N, R, X, Y, and Z:

$$A + M \rightleftharpoons X, \quad B + N \rightleftharpoons Y \to 2A + N, \quad B + X \rightleftharpoons Z \to R + M. \tag{1.1}$$

By virtue of the occurrence of chemical reactions, the molar concentrations of the various species within the vessel will generally depend on time. These we denote by $c_A(t), c_B(t), \ldots, c_Z(t)$, which, by supposition, are identical to the species concentrations in the outflow stream. We denote by $c_A^f, c_B^f, \ldots, c_Z^f$ the (fixed) concentrations of the species in the feed stream. We assume hereafter that the rates of the chemical reactions are governed by mass action kinetics [4, 6, 7, 10, 11]. In this case, the system of differential equations associated with network (1.1) is the following:

$$\begin{aligned}
\dot{c}_A &= (g/V)(c_A^f - c_A) - k_{A+M\to X}c_Ac_M + k_{X\to A+M}c_X + 2k_{Y\to 2A+N}c_Y,\\
\dot{c}_B &= (g/V)(c_B^f - c_B) - k_{B+X\to Z}c_Bc_X + k_{Z\to B+X}c_Z + k_{Y\to B+N}c_Y\\
&\quad - k_{B+N\to Y}c_Bc_N,\\
\dot{c}_M &= (g/V)(c_M^f - c_M) - k_{A+M\to X}c_Ac_M + k_{X\to A+M}c_X + k_{Z\to R+M}c_Z,\\
\dot{c}_N &= (g/V)(c_N^f - c_N) - k_{B+N\to Y}c_Bc_N + k_{Y\to B+N}c_Y + k_{Y\to 2A+N}c_Y,\\
\dot{c}_R &= (g/V)(c_R^f - c_R) + k_{Z\to R+M}c_Z,\\
\dot{c}_X &= (g/V)(c_X^f - c_X) - k_{X\to A+M}c_X + k_{A+M\to X}c_Ac_M - k_{B+X\to Z}c_Bc_X\\
&\quad + k_{Z\to B+X}c_Z,\\
\dot{c}_Y &= (g/V)(c_Y^f - c_Y) - k_{Y\to B+N}c_Y + k_{B+N\to Y}c_Bc_N - k_{Y\to 2A+N}c_Y,\\
\dot{c}_Z &= (g/V)(c_Z^f - c_Z) + k_{B+X\to Z}c_Bc_X - k_{Z\to B+X}c_Z - k_{Z\to R+M}c_Z,
\end{aligned} \tag{1.2}$$

where g is the volumetric flow rate (volume/time), V is the reactor volume, $k_{A+M\to X}$ is the rate constant of the reaction $A + M \to X$, $k_{X\to A+M}$ is the rate constant of the

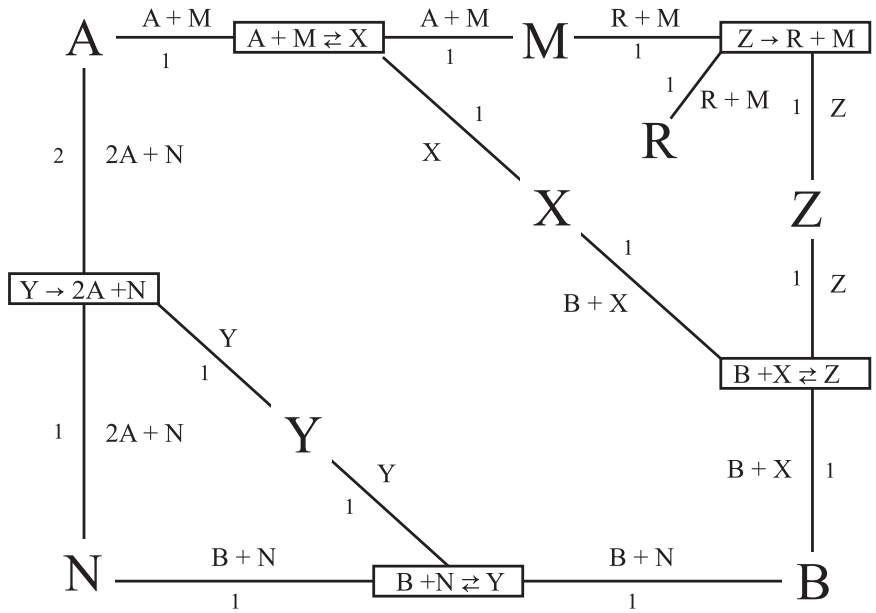

FIG. 1.1. *The SR graph* Γ *of the reaction network* (1.1).

reaction $X \to A + M$, and so on. See [4, 6] for a detailed explanation of how, given a reaction network, we obtain such a system of differential equations.

We say that the reaction network (1.1) *has the capacity for multiple positive equilibria* if there exist some positive flow rate g, positive volume V, nonnegative feed concentrations $c_A^f, \ldots, c_Z^f$, and positive rate constants $k_{A+M\to X}, \ldots, k_{Z\to R+M}$ such that the system of differential equations (1.2) has two or more distinct equilibria at which the species concentrations are positive.

In preparation for a description of how to draw the SR graph for a reaction network, we need a little vocabulary: By the *complexes* [10] of a reaction network we mean the objects at the heads and tails of the reaction arrows. Thus, the complexes of network (1.1) are $A + B$, X, $B + N$, Y, $2A + N$, $B + X$, Z, and $R + M$.

The SR graph for a reaction network has two kinds of nodes: *species nodes* and *reaction nodes*. There is a species node for each species in the network (A, B, M, N, R, Y, and Z in (1.1)). Moreover, there is a reaction node for each reaction or reversible reaction pair in the network. That is, reversible reactions such as $A + M \rightleftharpoons X$ share the same node. *Edges* join species nodes to reaction nodes as follows: If a species (such as A) appears in a complex (such as $A + M$) at the head or tail of a reaction (such as $A + M \rightleftharpoons X$), then an (unoriented) edge joins the species node to the reaction node and is *labeled* with the name of the complex in which that species appears. (Thus, for example, an edge would join the species node corresponding to A to the reaction node corresponding to $A + M \rightleftharpoons X$, and the edge would be labeled $A + M$.) The SR graph for network (1.1) is shown in Figure 1.1.

We now need to define some features of SR graphs that are especially relevant to our problem. Pairs of edges that meet at a reaction node and have the same complex label are called *c-pairs* (complex pairs). For example, the two edges labeled $A + M$ that meet at the reaction node $A + M \rightleftharpoons X$ in Figure 1.1 form a c-pair.

Notice that *cycles* might appear in the SR graph. Cycles that contain an odd

number of c-pairs are called *o-cycles* (odd cycles). For example, the outer cycle in Figure 1.1 is an o-cycle, since it contains three c-pairs, centered at the reaction nodes $A+M \rightleftharpoons X$, $B+N \rightleftharpoons Y$, and $Y \to 2A+N$. Cycles that contain an even number of c-pairs are called *e-cycles* (even cycles). In particular, cycles that contain no c-pairs are e-cycles.

The *stoichiometric coefficient* of an edge is the coefficient of the species adjacent to that edge in the complex label of the edge. For the reader's convenience, we have labeled each edge of the SR graph in Figure 1.1 with its stoichiometric coefficient. For example, the stoichiometric coefficient of the edge from A to $A+M \rightleftharpoons X$ in Figure 1.1 is 1, and the stoichiometric coefficient of the edge from A to $Y \to 2A+N$ is 2. Cycles for which alternately multiplying and dividing the stoichiometric coefficients along the cycle gives the final result 1 are called *s-cycles* (stoichiometric cycles). For example, for the outer cycle that begins at A and visits N, B, Z M, the stoichiometric coefficients along the cycle are $2,1,1,1,1,1,1,1,1,1$ (see Figure 1.1). Then, by alternately multiplying and dividing the stoichiometric coefficients along the cycle, we get $2 \cdot 1^{-1} \cdot 1 \cdot 1^{-1} \cdot 1 \cdot 1^{-1} \cdot 1 \cdot 1^{-1} \cdot 1 \cdot 1^{-1} = 2$, and thus this cycle is not an s-cycle. On the other hand, for the cycle that visits N, Y we get $1 \cdot 1^{-1} \cdot 1 \cdot 1^{-1} = 1$, and thus this cycle is an s-cycle.

We say that two cycles in the SR graph *have a species-to-reaction (S-to-R) intersection* if the common edges of the two cycles constitute a path that begins at a species node and ends at a reaction node, or if they constitute a disjoint union of such paths.

For example, the common edges of the cycle that visits N, Y with the cycle that visits A, X, B, Y in Figure 1.1 form a path that begins at a reaction node and ends at a reaction node, and so they do *not* have an S-to-R intersection.

Then the main result of this article is the following.

THEOREM 1.1. *Consider a reaction network such that in its SR graph*

(i) *each cycle is an o-cycle or an s-cycle,*

(ii) *no two e-cycles have an S-to-R intersection.*

Then, taken with mass action kinetics, the reaction network does not have the capacity for multiple positive equilibria.

In particular, the theorem above implies that the reaction network (1.1) does not have the capacity for multiple equilibria. Indeed, all cycles in the SR graph of (1.1) are o-cycles, except for two cycles (the cycle that visits N, Y and the cycle that visits M, Z, X), which are s-cycles, and so condition (i) is satisfied. Also, these two e-cycles do not have an S-to-R intersection, so condition (ii) is satisfied. On the other hand, previous results in [8, 15, 16] give no information about network (1.1).

In general, if there are no cycles in the SR graph, or if all cycles are o-cycles, then conditions (i) and (ii) are satisfied. Or, if all stoichiometric coefficients in a network are one, then all cycles are s-cycles, and so condition (i) is satisfied. Also, if no species node is adjacent to three or more reaction nodes, then no two cycles have an S-to-R intersection, and so condition (ii) is satisfied. Note then that for some reaction networks it is not even necessary to draw the SR graph in order to conclude that they do not have the capacity for multiple equilibria: If all the stoichiometric coefficients are one and no species appears in three or more reactions, then the reaction network does not have the capacity for multiple equilibria. For example, if we replace $2A+N$ by $A+N$ in (1.1), then the new reaction network has all stoichiometric coefficients equal to one, and no species appears in three or more reactions. Therefore, without having to draw its SR graph, it follows that this new reaction network does not have the capacity for multiple equilibria.

In the next section we begin our proof of Theorem 1.1. In particular, we will eventually want to connect the SR graph to network *injectivity*, an idea introduced in [4].

2. Reaction networks and injectivity. Let us first give a precise definition of a reaction network in terms of the set of species, the set of complexes, and the set of reactions. Recall that the *complexes* of a reaction network are to be understood as the objects at the head or tail of reaction arrows. We denote by $\mathbb{R}$ the set of real numbers, by $\mathbb{R}_+$ the set of positive numbers, and by $\bar{\mathbb{R}}_+$ the set of nonnegative numbers. Also, given a set I, we denote by $\mathbb{R}^I$ the vector space of formal linear combinations $\sum_{i\in I}\lambda_i i$, generated by the elements of $i \in I$, with coefficients $\lambda_i \in \mathbb{R}$. By $\bar{\mathbb{R}}_+^I$ we mean the members of $\mathbb{R}^I$ with $\lambda_i \geq 0$ for all $i \in I$. By $\mathbb{R}_+^I$ we mean the members of $\mathbb{R}^I$ with $\lambda_i > 0$ for all $i \in I$. By the *support* of an element $x \in \mathbb{R}_+^I$ we mean the set $\operatorname{supp}(x) = \{i \in I : \ x_i \neq 0\}$.

As in [4], we can regard a chemical reaction network as an abstract structure given by the following definition.

Definition 2.1 (see [6, 7]). *A* chemical reaction network $\mathcal{N} = (\mathscr{S}, \mathscr{C}, \mathscr{R})$ *consists of three finite sets:*

(i) *a set* $\mathscr{S}$ *of* species *of the network,*
(ii) *a set* $\mathscr{C} \subset \bar{\mathbb{R}}_+^{\mathscr{S}}$ *of* complexes *of the network,*
(iii) *a set* $\mathscr{R} \subset \mathscr{C} \times \mathscr{C}$ *of* reactions*, with the following properties:*
  (a) $(y, y) \notin \mathscr{R}$ *for any* $y \in \mathscr{C}$*,*
  (b) *for each* $y \in \mathscr{C}$ *there exists* $y' \in \mathscr{C}$ *such that* $(y, y') \in \mathscr{R}$ *or such that* $(y', y) \in \mathscr{R}$*.*

We write the more suggestive $y \to y'$ in place of (y, y') when (y, y') is a member of $\mathscr{R}$. Also, if $\{y \to y',\ y' \to y\} \subset \mathscr{R}$, we will denote the set $\{y \to y',\ y' \to y\}$ by the more suggestive $y \rightleftharpoons y'$ and will say that $y \rightleftharpoons y'$ is a *reversible reaction.* If $y \to y' \in \mathscr{R}$ and $y' \to y \notin \mathscr{R}$, we say that $y \to y'$ is an *irreversible reaction.* For example, consider the reaction network

$$A + B \rightleftharpoons C, \qquad A \to 2B. \tag{2.1}$$

In this case $\mathscr{S} = \{A, B, C\}$, $\mathscr{C} = \{A + B, C, A, 2B\}$, $\mathscr{R} = \{A + B \to C,\ C \to A + B,\ A \to 2B\}$.

Definition 2.2. *By a* mass action system *we mean a reaction network* $(\mathscr{S}, \mathscr{C}, \mathscr{R})$ *taken together with an element* $k \in \mathbb{R}_+^{\mathscr{R}}$*. The number* $k_{y\to y'}$ *is the* rate constant *for the reaction* $y \to y'$*.*

In the next definition we use the following notation: for two vectors in $\bar{\mathbb{R}}_+^{\mathscr{S}}$, say $u = \sum_{s\in\mathscr{S}} u_s s$ and $v = \sum_{s\in\mathscr{S}} v_s s$, we denote by u^v the product $\prod_{s\in\mathscr{S}}(u_s)^{v_s}$. Here we use the convention that $0^0 = 1$.

Our aim now is to write the differential equation that, for a mass action system, governs the evolution of composition vector $c \in \bar{\mathbb{R}}_+^{\mathscr{S}}$.

Definition 2.3. *For a mass action system* $(\mathscr{S}, \mathscr{C}, \mathscr{R}, k)$ *the associated differential equation is*

$$\dot{c} = \sum_{y\to y' \in \mathscr{R}} k_{y\to y'} c^y (y' - y). \tag{2.2}$$

In components, the differential equations associated with a mass action system derived from network (2.1) are

$$\begin{aligned}\dot{c}_A &= -k_{A+B\to C}c_Ac_B - k_{A\to 2B}c_A + k_{C\to A+B}c_C,\\ \dot{c}_B &= -k_{A+B\to C}c_Ac_B + k_{C\to A+B}c_C + 2k_{A\to 2B}c_A,\\ \dot{c}_C &= k_{A+B\to C}c_Ac_B - k_{C\to A+B}c_C.\end{aligned} \tag{2.3}$$

Note that these are not the differential equations one would write for a CFSTR, for they take no account of the effects of the feed and outflow streams. The appropriate CFSTR differential equations are

$$\begin{aligned}\dot{c}_A &= (g/V)(c_A^f - c_A) - k_{A+B\to C}c_Ac_B - k_{A\to 2B}c_A + k_{C\to A+B}c_C,\\ \dot{c}_B &= (g/V)(c_B^f - c_B) - k_{A+B\to C}c_Ac_B + k_{C\to A+B}c_C + 2k_{A\to 2B}c_A,\\ \dot{c}_C &= (g/V)(c_C^f - c_C) + k_{A+B\to C}c_Ac_B - k_{C\to A+B}c_C.\end{aligned} \tag{2.4}$$

As we indicated in [4], however, the appropriate CFSTR equations *do* derive from a mass action system associated with the augmented network

$$A + B \rightleftharpoons C,\ A \to 2B,\ 0 \to A,\ 0 \to B,\ 0 \to C,\ A \to 0,\ B \to 0,\ C \to 0. \tag{2.5}$$

Here 0 is the *zero complex*, which is understood to be the zero vector of $\bar{\mathbb{R}}_+^{\mathscr{S}}$. As explained in [4], the added *outflow reactions* $A \to 0$, $B \to 0$, and $C \to 0$ serve to model the contributions of the outflow stream to the CFSTR differential equations (taking each rate constant to be g/V), while the *feed reactions* $0 \to A$, $0 \to B$, and $0 \to C$ serve to model the contributions of the feed stream (taking the rate constants to be, respectively, gc_A^f/V, gc_B^f/V, and gc_C^f/V).

In general, to obtain the augmented network, one adds to the network of true chemical reactions an outflow reaction $s \to 0$ for each $s \in \mathscr{S}$, and a feed reaction $0 \to s$ for each species s deemed to be in the feed stream. *Hereafter, when we speak of a reaction network* $(\mathscr{S}, \mathscr{C}, \mathscr{R})$*, it will be understood that we have in mind the augmented network constructed to generate the CFSTR differential equations. In particular, the full set of reactions* $\mathscr{R}$ *will contain the "true" set of chemical reactions (denoted* $\mathscr{R}_t$*) and a reaction* $s \to 0$ *for each* $s \in \mathscr{S}$*.*

Definition 2.4. *A reaction network* $(\mathscr{S}, \mathscr{C}, \mathscr{R})$ has the capacity to admit multiple positive equilibria *if there is a* $k \in \mathbb{R}_+^{\mathscr{R}}$ *such that, for the mass action system* $(\mathscr{S}, \mathscr{C}, \mathscr{R}, k)$*, the associated differential equation admits two distinct equilibria in* $\mathbb{R}_+^{\mathscr{S}}$*.*

Remark. Our aim will be to describe networks that do *not* have the capacity for multiple positive equilibria. For our study of classical CFSTRs this is apparently a little more than we need: In Definition 2.4, we permit the rate constants associated with the outflow reactions (i.e., reactions of the form $s \to 0$ for all $s \in \mathscr{S}$) to take arbitrary positive values, while for the classical CFSTRs such rate constants should all be identical (and equal to g/V).

We are interested in what we call *injective* reaction networks because *injective reaction networks do not have the capacity for multiple positive equilibria* (see [4]). The characterization of injectivity we use here is the one given by Theorem 3.3 in [4].

Definition 2.5. *A reaction network* $\mathcal{N} = (\mathscr{S}, \mathscr{C}, \mathscr{R})$ *with* n *species is* injective *if*

$$\det(y_1, \ldots, y_n)\det(y_1 - y_1', \ldots, y_n - y_n') \geq 0$$

for all choices of reactions[1] $y_1 \to y_1', \ldots, y_n \to y_n'$ *in* $\mathscr{R}$*.*

[1]Some of these reactions could be feed or outflow reactions.

Therefore, we need to study the relationship between the signs of $\det(y_1, \ldots, y_n)$ and $\det(y_1 - y_1', \ldots, y_n - y_n')$. For this, our main tool will be the SR graph.

3. The SR graph.

DEFINITION 3.1. *Consider some reaction network* $\mathcal{N} = (\mathscr{S}, \mathscr{C}, \mathscr{R})$. *The* SR graph $\Gamma_{\mathcal{N}}$ *of* $\mathcal{N}$ *is an unoriented graph defined as follows. Each node of* $\Gamma_{\mathcal{N}}$ *is either a* species node *or a* reaction node. *There is one species node for each species in* $\mathscr{S}$. *There is one reaction node for each reversible reaction in* $\mathscr{R}_t$, *and there is one reaction node for each irreversible reaction in* $\mathscr{R}_t$.[2] *Each edge in the graph* $\Gamma_{\mathcal{N}}$ *connects a species node to a reaction node (so* $\Gamma_{\mathcal{N}}$ *is a bipartite graph) according to the following prescription: Consider a species node* s *and a reaction node* r *given by* $y \to y'$ *or* $y \rightleftharpoons y'$. *If* $s \in \operatorname{supp}(y)$, *then there is an edge between* s *and* r *and we* label *it with the complex* y. *Similarly, if* $s \in \operatorname{supp}(y')$, *then there is an edge*[3] *between* s *and* r *and we* label *it with the complex* y'.

For example, for the reaction network (2.1) there are three species nodes and two reaction nodes, and we get the SR graph in Figure 3.1.

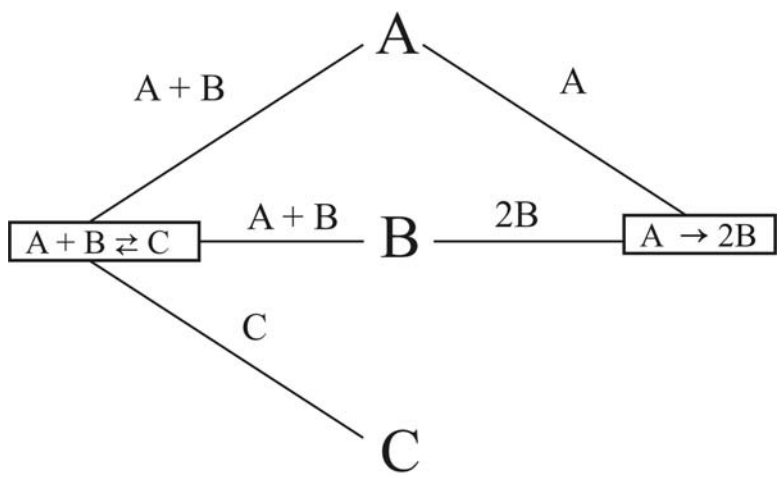

FIG. 3.1. *The SR graph of reaction network* (2.1).

In an SR graph there are some configurations of edges and cycles that are especially important to us. The following definition describes them.

DEFINITION 3.2. *Consider the SR graph* $\Gamma_{\mathcal{N}}$ *of some reaction network* $\mathcal{N}$. *A pair of edges in* $\Gamma_{\mathcal{N}}$ *that meet at a reaction node and have the same complex label is called a* c-pair. *A cycle that contains an odd number of c-pairs is called an* o-cycle. *A cycle that contains an even number of c-pairs is called an* e-cycle. *The* stoichiometric coefficient *of an edge is the coefficient of the species adjacent to that edge in the complex label of the edge. An* s-cycle *is one for which, if we alternately multiply and divide the stoichiometric coefficients of edges along the cycle, we get the final result* 1. *An* S-to-R chain *in an SR graph is a simple path from a species node*

[2]Recall that $\mathscr{R}_t$ is the set of true chemical reactions—that is, the set of reactions before the addition of reactions such as $s \to 0$ or $0 \to s$.

[3]If s is contained in both $\operatorname{supp}(y)$ and $\operatorname{supp}(y')$ (as in $A + B \to 2A$), then there are two edges joining the species node s to the reaction node $y \to y'$, one carrying the label y and the other carrying the label y'.

to a reaction node. We say that two cycles in $\Gamma_{\mathcal{N}}$ have an S-to-R intersection *if their common edges constitute an S-to-R chain or a disjoint union of two or more S-to-R chains.*

Recall that we gave another example of an SR graph in section 1.

4. The OSR graph. In this section we define the *oriented species-reaction graph (OSR graph)*, which will be the main tool for proving the results in the rest of this article. For this and the next section, we consider a fixed reaction network $\mathcal{N} = (\mathscr{S}, \mathscr{C}, \mathscr{R})$. Recall that any complex y in $\mathscr{C}$ is a linear combination $y = \sum_{s \in \mathscr{S}} y_s s$, where $y_s \geq 0$ for all $s \in \mathscr{S}$. Recall too that the *support* of y is defined by $\operatorname{supp}(y) = \{s \in \mathscr{S} : y_s > 0\}$. In view of our interest in network injectivity (Definition 2.5), we consider a fixed ordered set of reactions[4] $R = \{y_1 \to y_1', \ldots, y_n \to y_n'\} \subset \mathscr{R}$, where n is the number of species for the network $\mathcal{N}$. *We seek to determine the conditions under which the product*

$$\det(y_1, \ldots, y_n) \det(y_1 - y_1', \ldots, y_n - y_n')$$

is positive when it is not zero. Hereafter, then, we assume that, for the ordered set of reactions R under consideration, the product above is not zero.

In this case the complexes $y_1, \ldots, y_n$ are linearly independent vectors. Then it is not difficult to see that one can make a bijective association between the n species of the network $\mathcal{N}$ and the n complexes $y_1, \ldots, y_n$, which associates with each complex a particular species in its support. In other words, there exists a (not necessarily unique) bijection $f : \{y_1, \ldots, y_n\} \to \mathscr{S}$ such that $f(y_i) \in \operatorname{supp}(y_i)$, $i = 1, 2, \ldots, n$.

Hereafter, we choose one such bijection and denote by e_i the species $f(y_i)$. Thus, the set of species of the network $\mathcal{N}$ becomes $\{e_1, \ldots, e_n\}$, and we have $e_i \in \operatorname{supp}(y_i)$, $i = 1, 2, \ldots, n$. For the sake of concreteness, we suppose that the determinant function is such that $\det(e_1, \ldots, e_n) > 0$. (In what follows, some readers might wish to associate $\{e_1, \ldots, e_n\}$ with the standard basis of $\mathbb{R}^n$, in which case the complexes $y_1, \ldots, y_n$ would be associated with vectors in $\mathbb{R}^n$.)

DEFINITION 4.1. *The* OSR graph *of* R *is an oriented graph* $\mathcal{G}_R$*, defined as follows. The set of nodes of* $\mathcal{G}_R$ *is* $\mathscr{S} \cup (R \cap \mathscr{R}_t)$*. The nodes in* $\mathscr{S}$ *are called* species nodes*, and the nodes in* $R \cap \mathscr{R}_t$ *are called* reaction nodes*. Each (oriented) edge in the graph* $\mathcal{G}_R$ *connects a species node to a reaction node or a reaction node to a species node in the following way. Consider some true reaction* $y_j \to y_j'$*. There is exactly one incoming edge toward the node* $y_j \to y_j'$ *in* $\mathcal{G}_R$*, and it comes from the node of the species* e_j*. We label this edge with the complex* y_j*. There is one outgoing edge from the reaction node* $y_j \to y_j'$ *toward each species node* $e_i \in \operatorname{supp}(y_j)$*, except for* e_j*. We label these edges with the complex* y_j *as well. There is one outgoing edge from the reaction node* $y_j \to y_j'$ *toward each species node* $e_i \in \operatorname{supp}(y_j')$*. We label these edges with the complex* y_j'*.*

For example, if in the reaction network (2.1) we choose the reactions that make up the set R to be $y_1 \to y_1' = A \to 2B$, $y_2 \to y_2' = A + B \to C$, $y_3 \to y_3' = C \to 0$ and we identify A, B, C with e_1, e_2, e_3, then we get the OSR graph in Figure 4.1.

Since the OSR graph is defined similarly to the SR graph, we can also refer to s-cycles, o-cycles, and e-cycles in the OSR graph, their definitions being analogous to those in the SR graph. However, whenever we mention a cycle in an OSR graph, that cycle *will have to be an oriented cycle.* In particular, the s-cycles, o-cycles, and e-cycles in an OSR graph have to be oriented cycles, and a c-pair has to be an oriented

[4]Some of these reactions might be outflow reactions.

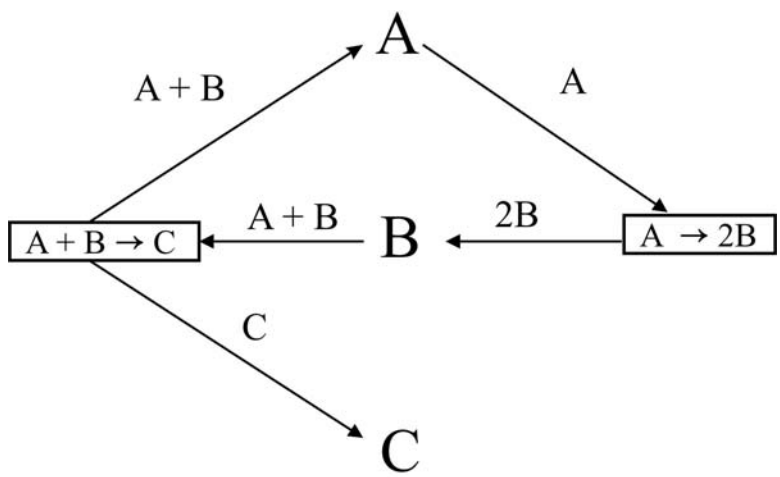

FIG. 4.1. *An OSR graph for some reactions in* (2.1).

pair of edges as well (i.e., one of the two adjacent edges that form a c-pair should point toward their common reaction vertex, and the other should point away from their common reaction vertex).

Remark. Note that each (oriented) edge in the OSR graph $\mathcal{G}_R$, connecting some species node and some reaction node, corresponds uniquely to some (unoriented) edge in the SR graph $\Gamma_{\mathcal{N}}$ of $\mathcal{N}$ connecting the same species node to the corresponding reaction node in $\Gamma_{\mathcal{N}}$, and has the same complex label. In other words, the OSR graph $\mathcal{G}_R$ is an (oriented) subgraph of the SR graph $\Gamma_{\mathcal{N}}$.

Remark. Suppose that R contains only outflow reactions, i.e., $R = \{A_1 \to 0, \ldots, A_n \to 0\}$. Then the OSR graph G_R has n species vertices, has *no reaction vertices*, and has *no edges*.

5. Properties of the OSR graph. To be able to formulate properties of the OSR graph we first need to introduce more definitions and notation.

Note that, for each $y_i \to y_i' \in R$, the complex y_i has a decomposition of the form

$$y_i = \sum_{e_k \in \mathrm{supp}(y_i)} y_{ik} e_k,$$

which defines numbers $y_{ik} > 0$. In particular, recall that $e_i \in \mathrm{supp}(y_i)$; i.e., we obtain $y_{ii} > 0$.

In view of Definition 2.5, we will now define a special multilinear expansion of $\det(y_1 - y_1', \ldots, y_n - y_n')$. For each $y_i \to y_i' \in R$ the vector $y_i - y_i'$ has a decomposition of the form

$$y_i - y_i' = \sum_{e_k \in \mathrm{supp}(y_i)} y_{ik} e_k - \sum_{e_k \in \mathrm{supp}(y_i')} y_{ik}' e_k,$$

where $y_{ik} > 0$ were mentioned above. We want now to consider the multilinear expansion of $\det(y_1 - y_1', \ldots, y_n - y_n')$ obtained by expanding each $y_i - y_i'$ in terms of the basis elements $e_1, \ldots, e_n$, with one exception: If $\mathrm{supp}(y_i) \cap \mathrm{supp}(y_i') \neq \emptyset$ for some i (as in a reaction of the form $A + B \to 2A$), we *do not* want to confuse

the contribution of y_i with the contribution of y_i'. For this reason, we represent the multilinear expansion of $\det(y_1 - y_1', \ldots, y_n - y_n')$ as the sum of all terms of the form

$$\det(\delta_{1k_1} e_{k_1}, \ldots, \delta_{nk_n} e_{k_n}),$$

where $e_{k_1} \in \operatorname{supp}(y_1) \cup \operatorname{supp}(y_1'), \ldots, e_{k_n} \in \operatorname{supp}(y_n) \cup \operatorname{supp}(y_n')$, and

$$\delta_{ik_i} = \begin{cases} y_{ik_i} & \text{if } e_{k_i} \in \operatorname{supp}(y_i) \backslash \operatorname{supp}(y_i'), \\ -y_{ik_i}' & \text{if } e_{k_i} \in \operatorname{supp}(y_i') \backslash \operatorname{supp}(y_i), \\ \text{either } y_{ik_i} \text{ or } -y_{ik_i}' & \text{if } e_{k_i} \in \operatorname{supp}(y_i) \cap \operatorname{supp}(y_i'). \end{cases}$$

DEFINITION 5.1. *By a* term in the expansion of the determinant $\det(y_1 - y_1', \ldots, y_n - y_n')$ *we mean a term in the multilinear expansion of* $\det(y_1 - y_1', \ldots, y_n - y_n')$ *described above.*

Note that a term might have the value zero. We will describe an important relationship between *nonzero* terms in the expansion of $\det(y_1 - y_1', \ldots, y_n - y_n')$ and the graph $\mathcal{G}_R$. Let us denote by Δ the term $\det(y_{11}e_1, \ldots, y_{nn}e_n)$. Of course, Δ is a (nonzero) term in the expansion of $\det(y_1 - y_1', \ldots, y_n - y_n')$ in the sense of the previous definition. Suppose that there is an edge ε in $\mathcal{G}_R$ from the reaction node $y_i \to y_i'$ to some species node e_k and having the complex label y_i. Let us denote by Δ_ε the result of replacing $y_{ii}e_i$ by $y_{ik}e_k$ in Δ and leaving everything else unchanged. Note that, according to the definition above, Δ_ε *is a (zero-valued) term in the expansion of* $\det(y_1 - y_1', \ldots, y_n - y_n')$. Similarly, suppose there is an edge ε' in $\mathcal{G}_R$ from the reaction node $y_i \to y_i'$ to some species node e_k and having the complex label y_i'. Let us denote by $\Delta_{\varepsilon'}$ the result of replacing $y_{ii}e_i$ by $-y_{ik}'e_k$ in Δ and leaving everything else unchanged. According to the definition above, $\Delta_{\varepsilon'}$ *is also a (zero-valued) term in the expansion of* $\det(y_1 - y_1', \ldots, y_n - y_n')$.

If L is a cycle in $\mathcal{G}_R$, let us denote by Δ_L the term resulting from making replacements in Δ as above, simultaneously for all edges in L that go from a reaction node to a species node. (See the example after the proof of the following lemma.) Then Δ_L is also a (nonzero) term in the expansion of $\det(y_1 - y_1', \ldots, y_n - y_n')$. If $\mathcal{L}$ is a set of disjoint cycles in $\mathcal{G}_R$, let us denote by $\Delta_{\mathcal{L}}$ the term resulting from making replacements in Δ as above, simultaneously for all edges in $\mathcal{L}$ that go from a reaction node to a species node. Then $\Delta_{\mathcal{L}}$ is also a (nonzero) term in the expansion of $\det(y_1 - y_1', \ldots, y_n - y_n')$. Lemma 5.1 will show that all nonzero terms in the expansion of $\det(y_1 - y_1', \ldots, y_n - y_n')$ are of the form $\Delta_{\mathcal{L}}$ for some set $\mathcal{L}$ of disjoint cycles in $\mathcal{G}_R$.

The case of $\det(y_1, \ldots, y_n)$ is similar, but simpler. We have

$$\det(y_1, \ldots, y_n) = \sum_{e_{k_1} \in \operatorname{supp}(y_1), \ldots, e_{k_n} \in \operatorname{supp}(y_n)} \det(y_{1k_1} e_{k_1}, \ldots, y_{nk_n} e_{k_n}),$$

and we state the following definition.

DEFINITION 5.2. *By a* term in the expansion of the determinant $\det(y_1, \ldots, y_n)$ *we mean a term in the multilinear expansion of* $\det(y_1, \ldots, y_n)$ *above.*

Note now that, according to the two definitions above, each term in the expansion of the determinant $\det(y_1, \ldots, y_n)$ is also a term in the expansion of the determinant $\det(y_1 - y_1', \ldots, y_n - y_n')$. Note also that Δ_ε defined as above is a term in the expansion of $\det(y_1, \ldots, y_n)$, since the complex label of ε is y_i, while $\Delta_{\varepsilon'}$ defined as above will not be a term in the expansion of $\det(y_1, \ldots, y_n)$, since the complex label of ε' is y_i'. Let us refer to edges similar to ε' as *product edges*. In other words, an edge ε' is a "product edge" if it is oriented from a reaction node $y_i \to y_i'$ to a species node, and

the complex label of the edge ε' is y_i'. Then, if a cycle L in $\mathcal{G}_R$ contains no product edges, Δ_L is also a (nonzero) term in the expansion of $\det(y_1, \ldots, y_n)$. Similarly, if $\mathcal{L}$ is a set of disjoint cycles in $\mathcal{G}_R$ that contain no product edges, then $\Delta_{\mathcal{L}}$ is also a (nonzero) term in the expansion of $\det(y_1, \ldots, y_n)$.

The following lemma associates with each nonzero term in the expansion of $\det(y_1 - y_1', \ldots, y_n - y_n')$ a set of mutually disjoint cycles in the OSR graph $\mathcal{G}_R$, in a bijective way (also note the example after the proof).

LEMMA 5.1. *There is a bijective correspondence that associates with each nonzero term Δ_* in the expansion of $\det(y_1 - y_1', \ldots, y_n - y_n')$ a set $\mathcal{L}$ of disjoint cycles in $\mathcal{G}_R$ such that $\Delta_* = \Delta_{\mathcal{L}}$. In particular, if $\mathbf{L}$ is the collection of all sets of mutually disjoint cycles in $\mathcal{G}_R$, we have*

$$\det(y_1 - y_1', \ldots, y_n - y_n') = \sum_{\mathcal{L} \in \mathbf{L}} \Delta_{\mathcal{L}}.$$

Proof. Consider some nonzero term $\Delta_* = \det(\delta_{1k_1} e_{k_1}, \ldots, \delta_{nk_n} e_{k_n})$ in the expansion of $\det(y_1 - y_1', \ldots, y_n - y_n')$. Then $(k_1, k_2, \ldots, k_n)$ is a permutation of the set $\{1, 2, \ldots, n\}$. We denote this permutation by σ, i.e., $\sigma(i) = k_i$, $i = 1, \ldots, na$. Recall that if $e_k \in \operatorname{supp}(y_i) \cup \operatorname{supp}(y_i')$ and $i \neq k$, then there is an edge in $\mathcal{G}_R$ from the reaction node $y_i \to y_i'$ to the species node e_k. Also, recall that for any i there is an edge in $\mathcal{G}_R$ from the species node e_i to the reaction node $y_i \to y_i'$.

Suppose that the permutation σ has a cycle of length two, $\mathcal{C} = (ij)$, $i \neq j$. In this case $\delta_{ij} \neq 0$ and $\delta_{ji} \neq 0$. Then $e_j \in \operatorname{supp}(y_i) \cup \operatorname{supp}(y_i')$ and $i \neq j$, so there is an edge in $\mathcal{G}_R$ from the reaction node $y_i \to y_i'$ to the species node e_j. Also, $e_i \in \operatorname{supp}(y_j) \cup \operatorname{supp}(y_j')$ and $j \neq i$, so there is an edge in $\mathcal{G}_R$ from the reaction node $y_j \to y_j'$ to the species node e_i. These two edges together with the edge from e_i to $y_i \to y_i'$ and the edge from e_j to $y_j \to y_j'$ form an (oriented) cycle $L_{\mathcal{C}}$ of length four in $\mathcal{G}_R$. Also, note that $\Delta_{L_{\mathcal{C}}}$ is the same as Δ_* at its ith and jth entries. Similarly, with any other cycle $\mathcal{C}$ of σ of length k we associate an (oriented) cycle of length $2k$ in $\mathcal{G}_R$.

Then it is not difficult to see that we have $\Delta_* = \Delta_{\mathcal{L}}$, where $\mathcal{L}$ is the set of all cycles $L_{\mathcal{C}}$ with $\mathcal{C}$ a cycle of σ.

Finally, note that if we begin from some set $\mathcal{L}$ of disjoint cycles in $\mathcal{G}_R$, construct the term $\Delta_{\mathcal{L}}$, and then construct a set $\tilde{\mathcal{L}}$ of disjoint cycles in $\mathcal{G}_R$ from the term $\Delta_{\mathcal{L}}$, as described above, then $\mathcal{L} = \tilde{\mathcal{L}}$. This shows that the correspondence described above is bijective. $\square$

Example. Consider the ordered set of five reactions

$$2A \to B, \quad A + B \to C, \quad C + D \to B + E, \quad D \to 2C, \quad E \to 0. \tag{5.1}$$

We identify the species sequence A, B, C, D, E with e_1, e_2, e_3, e_4, e_5. The corresponding OSR graph appears in Figure 5.1.

There are three oriented cycles: l_1, which passes through the species nodes A and B; l_2, which passes through the species nodes B and C; and l_3, which passes through the species nodes C and D.

We have $\det(y_1 - y_1', \ldots, y_5 - y_5') = \det(2e_1 - e_2, e_1 + e_2 - e_3, e_3 + e_4 - e_2 - e_5, e_4 - 2e_3, e_5)$. The term $\det(y_{11}e_1, \ldots, y_{nn}e_n)$ in the multilinear expansion of $\det(y_1 - y_1', \ldots, y_5 - y_5')$ is in this case $\det(2e_1, e_2, e_3, e_4, e_5)$. This term equals $\Delta_\emptyset$; i.e., it corresponds to the set $\mathcal{L}$ of disjoint cycles being the empty set.

We will now check that there is a one-to-one correspondence between all other nonzero terms in the multilinear expansion of $\det(y_1 - y_1', \ldots, y_5 - y_5')$ and nonempty sets of disjoint cycles in the OSR graph.

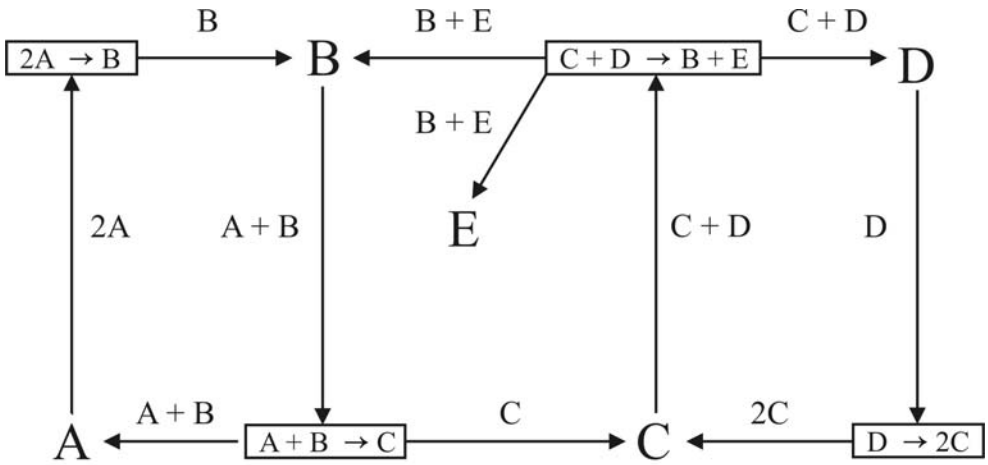

FIG. 5.1. *An OSR graph for the set of reactions* (5.1).

The cycle l_1 corresponds to replacing $2e_1$ in $\det(2e_1, e_2, e_3, e_4, e_5)$ by $-e_2$, and replacing e_2 in $\det(2e_1, e_2, e_3, e_4, e_5)$ by e_1, since the cycle l_1 visits the species node B after leaving A and visits the species node A after leaving B. The corresponding term in the multilinear expansion of $\det(y_1 - y_1', \ldots, y_5 - y_5')$ is therefore $\det(-e_2, e_1, e_3, e_4, e_5)$. Similarly, the cycle l_2 corresponds to replacing e_2 in $\det(2e_1, e_2, e_3, e_4, e_5)$ by $-e_3$, and replacing e_3 in $\det(2e_1, e_2, e_3, e_4, e_5)$ by $-e_2$, since the cycle l_2 visits the species node C after leaving B and visits the species node B after leaving C. The corresponding term in the multilinear expansion of $\det(y_1 - y_1', \ldots, y_5 - y_5')$ is therefore $\det(2e_1, -e_3, -e_2, e_4, e_5)$. Similarly, the cycle l_3 corresponds to the term $\det(2e_1, e_2, e_4, -2e_3, e_5)$. There is one more nonzero term in the expansion of $\det(y_1 - y_1', \ldots, y_5 - y_5')$. This term is $\det(-e_2, e_1, e_4, -2e_3, e_5)$, and it corresponds to the set $\{l_1, l_3\}$ of disjoint cycles.

To formulate an analogous lemma for $\det(y_1, \ldots, y_n)$ let us denote by $\mathbf{L}_{np}$ the collection of all sets of mutually disjoint cycles in $\mathcal{G}_R$ that have no product edges. Then we have the following result.

LEMMA 5.2. *There is a bijective correspondence that associates with each nonzero term Δ_* in the expansion of* $\det(y_1, \ldots, y_n)$ *a set $\mathcal{L} \in \mathbf{L}_{np}$ such that $\Delta_* = \Delta_{\mathcal{L}_{np}}$. In particular, we have*

$$\det(y_1, \ldots, y_n) = \sum_{\mathcal{L} \in \mathbf{L}_{np}} \Delta_{\mathcal{L}}.$$

Proof. The proof here is analogous to that of the previous lemma. ∎

Let us now look more closely at the connection between the SR graph and the OSR graph, as follows.

LEMMA 5.3. *If two (oriented) cycles l_1 and l_2 in $\mathcal{G}_R$ have a common vertex, then their (unoriented) versions l_1^{SR} and l_2^{SR} in $\Gamma_{\mathcal{N}}$ have an S-to-R intersection.*

Proof. Suppose that l_1 and l_2 have a species node s in common. Since they are oriented cycles, each one of them has to contain an outgoing edge from s. However, there is a unique outgoing edge adjacent to s in $\mathcal{G}_R$. Therefore that edge is common to the two cycles, and the corresponding edge in $\Gamma_{\mathcal{N}}$ is common to l_1^{SR} and l_2^{SR}. Analogously, if l_1 and l_2 have a reaction node r in common, each one of them has to

contain the unique incoming edge adjacent to r in $\mathcal{G}_R$. This shows that l_1^{SR} and l_2^{SR} have at least one edge in common.

Suppose now that we travel along the two cycles l_1 and l_2 in $\mathcal{G}_R$, beginning from some common edge and following the orientation of that edge. The first node where the two cycles separate from each other has to be a reaction node, since all species nodes have just one outgoing edge in $\mathcal{G}_R$. On the other hand, if we travel along the two cycles l_1 and l_2 in $\mathcal{G}_R$, beginning from some common edge, in the direction opposite to the orientation of that edge, then the first node where the two cycles separate from each other has to be a species node, since all reaction nodes have just one incoming edge in $\mathcal{G}_R$. In conclusion, the common edges of l_1^{SR} and l_2^{SR} form one or more S-to-R chains (see Definition 3.2); i.e., l_1^{SR} and l_2^{SR} have an S-to-R intersection. ∎

Before we can prove our main result we have to prove a few lemmas about special types of cycles in OSR graphs.

LEMMA 5.4. *Consider a set $\mathcal{L}$ of disjoint o-cycles in $\mathcal{G}_R$. Then $\Delta_{\mathcal{L}} > 0$.*

Proof. If $\mathcal{L} = \emptyset$, we have $\Delta_\emptyset = \det(y_{11}e_1, \dots, y_{nn}e_n) > 0$. Consider now the case when $\mathcal{L}$ contains exactly one cycle l. Denote by $e_{i_1}, e_{i_2}, \dots, e_{i_k}, e_{i_1}$ (in this order) the species vertices visited by the oriented cycle l. Then the term $\Delta_{\{l\}}$ is the same as $\det(y_{11}e_1, \dots, y_{nn}e_n)$ *except* that the entry $y_{i_1i_1}e_{i_1}$ in $\det(y_{11}e_1, \dots, y_{nn}e_n)$ is replaced by $\delta_{i_1i_2}e_{i_2}$, the entry $y_{i_2i_2}e_{i_2}$ is replaced by $\delta_{i_2i_3}e_{i_3}$, and so on, until the entry $y_{i_ki_k}e_{i_k}$ is replaced by $\delta_{i_ki_1}e_{i_1}$.

Since all $y_{ii} > 0$ it follows that the sign of $\Delta_{\{l\}}$ equals the sign of the cyclic permutation $(i_1i_2\dots i_k)$ times the sign of the product $\delta_{i_1i_2}\delta_{i_2i_3}\dots\delta_{i_ki_1}$. According to the standard decomposition of a cyclic permutation into a product of transpositions[5] the sign of the cyclic permutation $(i_1i_2\dots i_k)$ is $(-1)^{k-1}$. On the other hand, note that if the edge of l from the reaction node $y_{i_j} \to y'_{i_j}$ to the species node $e_{i_{j+1}}$ has the complex label y_{i_j}, then $\delta_{i_ji_{j+1}}$ is positive, and if the edge of l from the reaction node $y_{i_j} \to y'_{i_j}$ to the species node $e_{i_{j+1}}$ has the complex label y'_{i_j}, then $\delta_{i_ji_{j+1}}$ is negative.[6] Recall that the other edge of l adjacent to $y_{i_j} \to y'_{i_j}$ has to have the complex label y_{i_j}. In conclusion, the number of *positive* $\delta_{i_ji_{j+1}}$'s equals the number of *c-pairs* along l. However, according to the hypothesis, l has an odd number of c-pairs, say $2p+1$. Then the sign of the product $\delta_{i_1i_2}\delta_{i_2i_3}\dots\delta_{i_ki_1}$ is $(-1)^{k-2p-1}$, which implies that the sign of $\Delta_{\{l\}}$ is $(-1)^{k-1}(-1)^{k-2p-1}$, i.e., $\Delta_{\{l\}} > 0$.

For arbitrary $\mathcal{L}$ let us notice that since the cycles in $\mathcal{L}$ are mutually disjoint it follows that $\Delta_{\mathcal{L}}$ can be written as a product of determinants, one for each cycle in $\mathcal{L}$, and the considerations above apply for each one of these determinants. Then $\Delta_{\mathcal{L}} > 0$. ∎

LEMMA 5.5. *Suppose that l is an e-cycle and an s-cycle in $\mathcal{G}_R$, and $\mathcal{L}$ is a set of cycles in $\mathcal{G}_R$ that are disjoint from each other and disjoint from l. Then $\Delta_{\mathcal{L}} + \Delta_{\mathcal{L}\cup\{l\}} = 0$.*

Proof. Case 1. Suppose that the set $\mathcal{L}$ is empty. We have $\Delta_\emptyset = \det(y_{11}e_1, \dots, y_{nn}e_n)$. As in the proof of the previous lemma, the term $\Delta_{\{l\}}$ is the same as $\det(y_{11}e_1, \dots, y_{nn}e_n)$ *except* that the entry $y_{i_1i_1}e_{i_1}$ in $\det(y_{11}e_1, \dots, y_{nn}e_n)$ is replaced by $\delta_{i_1i_2}e_{i_2}$, the entry $y_{i_2i_2}e_{i_2}$ is replaced by $\delta_{i_2i_3}e_{i_3}$, and so on, until the entry $y_{i_ki_k}e_{i_k}$ is replaced by $\delta_{i_ki_1}e_{i_1}$. Note that the stoichiometric coefficient of the edge of l from the species node e_{i_j} to the reaction node $y_{i_j} \to y'_{i_j}$ is $y_{i_ji_j}$, and the stoichiometric coefficient of the edge of l from the reaction node $y_{i_j} \to y'_{i_j}$ to the species node $e_{i_{j+1}}$ is $\delta_{i_ji_{j+1}}$. Therefore if we alternately multiply and divide the stoichiometric coefficients

[5] I.e., the decomposition $(i_1i_2\dots i_k) = (i_1i_2)(i_2i_3)\dots(i_{k-1}i_k)$.

[6] Here we are using cyclic notation: By $\delta_{i_ki_{k+1}}$ we mean $\delta_{i_ki_1}$, and by $e_{i_{k+1}}$ we mean e_{i_1}.

of the edges along the cycle l, we get

$$(y_{i_1 i_1}/\delta_{i_1 i_2})(y_{i_2 i_2}/\delta_{i_2 i_3})\dots(y_{i_{k-1} i_{k-1}}/\delta_{i_{k-1} i_k})(y_{i_k i_k}/\delta_{i_k i_1}).$$

Since l is an s-cycle the product above equals 1, and we obtain $y_{i_1} y_{i_2} \dots y_{i_k} = \delta_{i_1}\delta_{i_2}\dots\delta_{i_k}$. Then the absolute value of $\Delta_{\{l\}}$ is the same as the absolute value of $\det(y_{11}e_1, \dots, y_{nn}e_n)$. Since l is an e-cycle we reason as in the proof of the previous lemma to conclude that $\Delta_{\{l\}}$ is negative. Then

$$\Delta_\emptyset + \Delta_{\{l\}} = \det(y_{11}e_1, \dots, y_{nn}e_n) + \Delta_{\{l\}} = 0.$$

Case 2. Suppose that $\mathcal{L}$ contains at least one cycle. Since l is disjoint from all cycles in $\mathcal{L}$, we can argue exactly as in Case 1 that $\Delta_{\mathcal{L}}$ and $\Delta_{\mathcal{L}\cup\{l\}}$ have the same absolute value and different signs. ∎

6. The main result. We can now prove the following theorem.

THEOREM 6.1. *Consider some reaction network $\mathcal{N}$ such that in its SR graph $\Gamma_{\mathcal{N}}$ all cycles are o-cycles or s-cycles, and no two e-cycles have an S-to-R intersection. Then the reaction network $\mathcal{N}$ is injective.*

Proof. Consider some set $R = \{y_1 \to y_1', \dots, y_n \to y_n'\}$ of n reactions in $\mathcal{N}$ such that $\det(y_1, \dots, y_n)\det(y_1 - y_1', \dots, y_n - y_n') \neq 0$. We want to show that

$$\det(y_1, \dots, y_n)\det(y_1 - y_1', \dots, y_n - y_n') > 0.$$

By reordering the basis vectors e_i, we can suppose that $e_i \in \operatorname{supp}(y_i)$; i.e., the set R obeys the conditions imposed in the previous sections. (We are using here the "standard" determinant, for which $\det(e_1, \dots, e_n) > 0$.)

We will show first that $\det(y_1 - y_1', \dots, y_n - y_n') > 0$. Recall from Lemma 5.1 that the determinant can be calculated as a sum of terms, one for each member of the class $\mathbf{L}$ of all possible sets (including the empty set) of disjoint cycles taken from the OSR graph $\mathcal{G}_R$:

$$\det(y_1 - y_1', \dots, y_n - y_n') = \sum_{\mathcal{L}\in\mathbf{L}} \Delta_{\mathcal{L}}. \tag{6.1}$$

Let $\{\mathcal{O}_1, \dots, \mathcal{O}_p\}$ be the collection of all possible sets (including the empty set) of disjoint o-cycles that can be taken from $\mathcal{G}_R$. We partition the class $\mathbf{L}$ of all possible sets of disjoint cycles into p subclasses $\{\mathbf{L}_1, \mathbf{L}_2, \dots, \mathbf{L}_p\}$, according to the particular subset of o-cycles that each cycle-set in $\mathbf{L}$ contains. That is, $\mathbf{L}_i$ might contain several sets of cycles, but for each set of cycles in $\mathbf{L}_i$ the subset of o-cycles is precisely $\mathcal{O}_i$, $i = 1, \dots, p$. In light of this partition, (6.1) can be rewritten as

$$\det(y_1 - y_1', \dots, y_n - y_n') = \sum_{i=1}^{p} \sum_{\mathcal{L}\in\mathbf{L}_i} \Delta_{\mathcal{L}}. \tag{6.2}$$

To show that the (presumed nonzero) $\det(y_1 - y_1', \dots, y_n - y_n')$ is in fact positive, it will suffice to show that $\sum_{\mathcal{L}\in\mathbf{L}_i} \Delta_{\mathcal{L}} \geq 0$ for all $i = 1, \dots, p$.

With this in mind, we consider a particular collection $\mathbf{L}_i$ of disjoint cycle-sets, with $\mathcal{O}_i$ the common subset of o-cycles for each cycle-set in $\mathbf{L}_i$. If no cycle-set in $\mathbf{L}_i$ contains an e-cycle, then, by virtue of Lemma 5.4, $\Delta_{\mathcal{L}} > 0$ for every $L \in \mathbf{L}_i$. (This is true even if $\mathcal{O}_i$ is empty.) Thus, it remains to consider only the case for which at least one cycle-set in $\mathbf{L}_i$ contains an e-cycle (which, by hypothesis, must be an

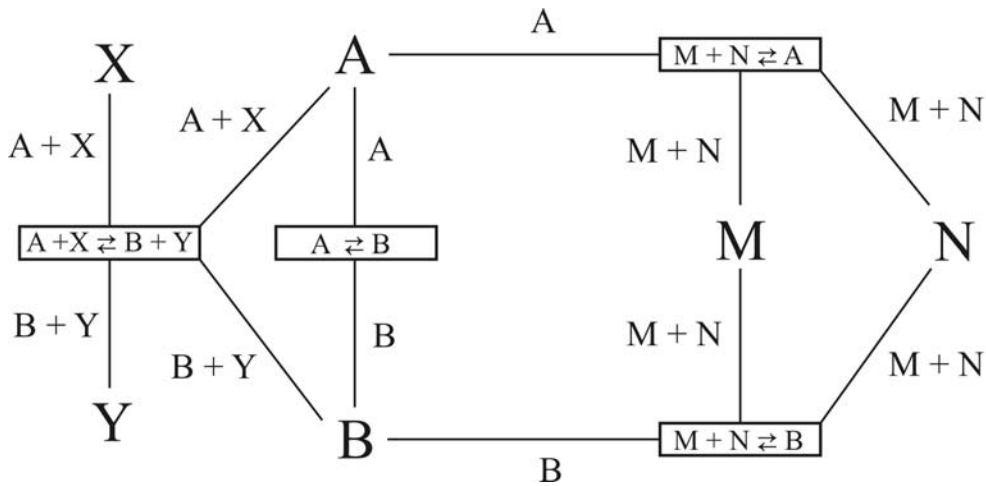

FIG. 6.1. *SR graph for the reaction network* (6.4).

s-cycle). Let l_e be some fixed e-cycle residing in a cycle-set of $\mathbf{L}_i$. Since l_e is disjoint from all members of $\mathcal{O}_i$ and from every other e-cycle (by virtue of the hypothesis and Lemma 5.3), it follows that, for each cycle-set $\mathcal{L} \in \mathbf{L}_i$ that does not have l_e as a member, the cycle-set $\mathcal{L} \cup \{l_e\}$ also belongs to the family $\mathbf{L}_i$. Note that from Lemma 5.5 we have

$$\Delta_{\mathcal{L}} + \Delta_{\mathcal{L}\cup\{l_e\}} = 0. \tag{6.3}$$

By partitioning $\mathbf{L}_i$ into such cycle-set pairs—one member distinguished from the other only by the presence of l_e—we can deduce in this case that $\sum_{\mathcal{L}\in\mathbf{L}_i} \Delta_{\mathcal{L}} = 0$.

The proof that $\det(y_1, \ldots, y_n) > 0$ is virtually identical, except that we consider only cycles containing no product edges. ∎

Remark. We will say that two cycles have an *orientable S-to-R intersection* if the two cycles have an S-to-R intersection and also have the following additional property: There are directions along the two cycles, consistent on their intersection, such that, for each S-to-R connected component of the intersection of the two cycles, its species end node occurs before its reaction end node. Note then that in Lemma 5.3 one can replace "S-to-R intersection" by "orientable S-to-R intersection." It is then possible to strengthen Theorem 6.1 by replacing "S-to-R intersection" by "orientable S-to-R intersection."

The following example shows a reaction network for which Theorem 6.1 gives no information, but for which this strengthened version of Theorem 6.1 does give information. Consider the reaction network

$$A + X \rightleftharpoons B + Y, \quad A \rightleftharpoons B, \quad M + N \rightleftharpoons A, \quad M + N \rightleftharpoons B. \tag{6.4}$$

The SR graph of this reaction network is shown in Figure 6.1. The middle cycle and the outer cycle are e-cycles that have an S-to-R intersection, but they do not have an orientable S-to-R intersection.

7. Split c-pairs. A different approach to showing that a reaction network does not have the capacity for multiple equilibria was described in [8, 15, 16] and is based on a different graph associated with the reaction network, called the *SCL graph*. That

approach introduced the notion of a *split c-pair*. The same notion of *split c-pair* makes sense for SR graphs as well: We say that two cycles in an SR graph *split a c-pair* if each edge of the c-pair appears in at least one of the two cycles, and if one of the two cycles contains one edge of the c-pair but not the other edge. (The other cycle might contain just the other edge, or both.) We have the following claim.

LEMMA 7.1. *Consider some reaction network $\mathcal{N}$ and its SR graph $\Gamma_{\mathcal{N}}$. Suppose that there are two cycles l_1 and l_2 in $\Gamma_{\mathcal{N}}$ that have an S-to-R intersection. Then l_1 and l_2 split a c-pair.*

Proof. Denote by r the reaction node ending of a component of the intersection of l_1 and l_2. Note that there are exactly three edges of l_1 and l_2 adjacent to the node r, precisely one of which is common to both cycles. Then at least two of these three edges have the same complex label, because there are at most two different complex labels on all edges adjacent to r. These two edges that have the same complex label (say ε_1 and ε_2) form a c-pair. It is not possible that each one of l_1 and l_2 contains both ε_1 and ε_2, since r is the ending of a component of the intersection of l_1 and l_2. On the other hand, each one of l_1 and l_2 has to contain at least one of ε_1 and ε_2, because, of their three edges adjacent to r, only one edge is common to both ε_1 and ε_2. Therefore l_1 and l_2 split a c-pair. ∎

Then our main result implies a criterion based on split c-pairs, but for the SR graph instead of the SCL graph, as follows.

COROLLARY 7.2. *Consider some reaction network $\mathcal{N}$ such that in its SR graph $\Gamma_{\mathcal{N}}$ all cycles are o-cycles or s-cycles and no two e-cycles split a c-pair. Then the reaction network $\mathcal{N}$ is injective.*

8. Concluding remarks and implications for biology. Theorem 1.1 provides rather easily satisfied conditions for the preclusion of multiple equilibria based on reaction network structure alone. The first condition will be satisfied in the very common situation for which every nonzero stoichiometric coefficient is 1 (in which case every cycle in the SR graph is an s-cycle). Further, violation of the second condition requires not only that there be two cycles in the SR graph but also that there be two even cycles that intersect in a prescribed way. Indeed, Theorem 1.1 goes a long way toward explaining just why, despite the great variety of reaction networks that might arise in nature, there are so few experimental reports in the chemical engineering literature of multiple stationary states in an isothermal homogeneous CFSTR context.

At the same time, we believe that the theorem provides reasons to believe that enzyme-driven biochemical reaction networks, written at the mechanistic mass action level, might be far more prone than others to exhibit multiple equilibria (and particularly bistability [2, 13, 18]). The fact is that enzyme catalysis promotes the presence of cycles in the SR graph, as might be seen by constructing the SR graph for even the simplest possible mechanism of enzyme catalysis:

$$S + E \rightleftharpoons SE \rightarrow P + E.$$

Here, E is an enzyme, S is a substrate, P is a product, and SE represents S bound to the enzyme. (The enzyme E serves as a catalyst for the "overall reaction" $S \rightarrow P$.) For more intricate enzyme-catalyzed reaction networks, written at the mechanistic level, it is easy to see how an abundance of cycles in the SR graph might arise (so that the second condition of Theorem 1.1 becomes more likely to be violated).

Extensions to biology are somewhat more complicated than might first appear, for the classical CFSTR model as described in this article might not be entirely ap-

propriate in biological settings, not even as a crude metaphor. Even if we think of the stirred reactor vessel as a surrogate for a cell and even if we imagine that substrates and products (S and P in the example above) are transported readily through the cell membrane, it might be inappropriate to suppose that high molecular weight enzyme-related molecules (E and ES in the example) are also transported through the cell membrane. That is, the heavy enzyme-related species might be regarded as "entrapped" within the cell. For the entrapped species picture, the classical homogeneous CFSTR equations, which presume an outflow of all species, might not always be suitable. (Note that this presumption played a substantive role in proofs contained in this paper and in its predecessor [4].)

In some cases, it might be appropriate to imagine that enzymes are synthesized within the cell at constant rate (i.e., constant relative to the rapid time scale of other reactions) and that all enzyme-containing species degrade within the cell at rates proportional to their concentrations. In such cases, the mathematics becomes essentially identical to the mathematics of the classical CFSTR: Constant-rate enzyme synthesis plays the role of a constant enzyme feed rate to the cell, while the degradation of enzyme-containing species replaces the outflow of these species from the cell.

In other cases, when such suppositions of enzyme supply and degradation are deemed inappropriate, the resulting mathematical structure is similar but not identical to that studied in this article; in particular, there are no outflow reactions, such as $E \to 0$ for the enzymatic species. It happens that the absence of these outflows gives rise to surprisingly delicate mathematical questions when one tries to extend the results of Theorem 1.1 to entrapped enzyme models. Indeed, *one must reframe the very question of multiple equilibria to take into account the fact that one is interested only in equilibria consistent with a fixed enzyme supply.*

Nevertheless, there is a sense in which results in this paper and its predecessor [4] carry over to the entrapped species case. Even when the kinetics is not mass action, it can be shown that if a reaction network does not have the capacity for multiple equilibria when all species are in the outflow, then, in the entrapped species case, the network cannot give rise to multiple equilibria that are, in a certain sense, nondegenerate [5].

REFERENCES

[1] R. Aris, *Elementary Chemical Reactor Analysis*, Dover Publications, Mineola, NY, 2000.

[2] C. P. Bagowski and J. E. Ferrell, *Bistability in the JNK cascade*, Curr. Biol., 11 (2001), pp. 1176–1182.

[3] G. Craciun, *Systems of Nonlinear Equations Deriving from Complex Chemical Reaction Networks*, Ph.D. thesis, Department of Mathematics, The Ohio State University, Columbus, OH, 2002.

[4] G. Craciun and M. Feinberg, *Multiple equilibria in complex chemical reaction networks:* I. *The injectivity property*, SIAM J. Appl. Math., 65 (2005), pp. 1526–1546.

[5] G. Craciun and M. Feinberg, *Multiple equilibria in complex chemical reaction networks: Extensions to entrapped species models*, IEE Proc. Systems Biol., to appear.

[6] M. Feinberg, *Lectures on Chemical Reaction Networks*, notes of lectures given at the Mathematical Research Center, University of Wisconsin, Madison, WI, 1979; available online at www.chbmeng.ohio-state.edu/~feinberg/LecturesOnReactionNetworks.

[7] M. Feinberg, *Existence and uniqueness of steady states for a class of chemical reaction networks*, Arch. Ration. Mech. Anal., 132 (1995), pp. 311–370.

[8] M. Feinberg, *Some recent results in chemical reaction network theory*, in Patterns and Dynamics in Reactive Media, IMA Vol. Math. Appl. 37, R. Aris, D. G. Aronson, and H. L. Swinney, eds., Springer, Berlin, 1991, pp. 43–70.

[9] V. Hatzimanikatis, K. H. Lee, and J. E. Bailey, *A mathematical description of regulation of the G1-S transition of the mammalian cell cycle*, Biotech. Bioengineering, 65 (1999), pp. 631–637.

[10] F. Horn and R. Jackson, *General mass action kinetics*, Arch. Ration. Mech. Anal., 47 (1972), pp. 81–116.

[11] *Law of mass action*, in Britannica Concise Encyclopedia, Encyclopedia Britannica, 2004, http://concise.britannica.com/ebc/article?eu=396792.

[12] E. Lee, A. Salic, R. Kruger, R. Heinrich, and M. W. Kirschner, *The roles of APC and axin derived from experimental and theoretical analysis of the Wnt pathway*, PLoS Biol., 1 (2003), pp. 116–132.

[13] N. I. Markevich, J. B. Hoek, and B. N. Kholodenko, *Signaling switches and bistability arising from multisite phosphorylation in protein kinase cascades*, J. Cell Biol., 164 (2004), pp. 353–359.

[14] B. Novak and J. J. Tyson, *Modeling the control of DNA replication in fission yeast*, Proc. Natl. Acad. Sci. USA, 94 (1997), pp. 9147–9152.

[15] P. Schlosser and M. Feinberg, *A theory of multiple steady states in isothermal homogeneous CFSTRs with many reactions*, Chemical Engineering Sci., 49 (1994), pp. 1749–1767.

[16] P. Schlosser, *A Graphical Determination of the Possibility of Multiple Steady States in Complex Isothermal CFSTRs*, Ph.D. thesis, Department of Chemical Engineering, University of Rochester, Rochester, NY, 1988.

[17] J. J. Tyson, K. C. Chen, and B. Novak, *Sniffers, buzzers, toggles and blinkers: Dynamics of regulatory and signaling pathways in the cell*, Curr. Opin. Cell Biol., 15 (2003), pp. 221–231.

[18] W. Xiong and J. E. Ferrell, *A positive-feedback-based bistable "memory module" that governs a cell fate decision*, Nature, 426 (2003), pp. 460–465.